Finger Chuck FG(T) series

Face clamping chuck, ideal for thin walled workpieces

- ●Distortion is reduced by using face clamping on thin section parts
- ●Using the aluminium rear body allows for high speed rotation, thus saving machining time
- ●Jaws include equalising mechanism to securely grip parts with variable thickness (Equalization amount/2.5 mm max)
- ●Through hole allows pneumatic accessories

＊CE correspondence

■ Dimensional Drawings

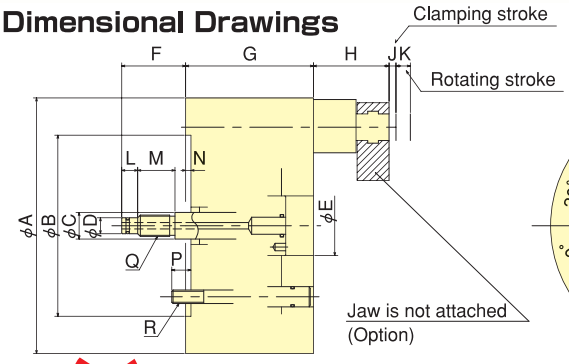

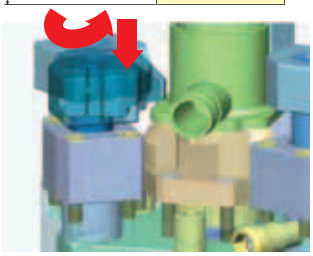

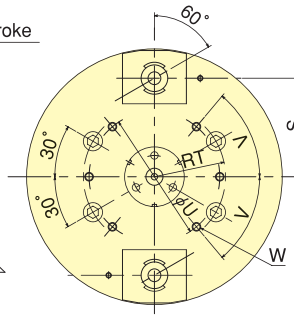

FGTxx : 2-jaw

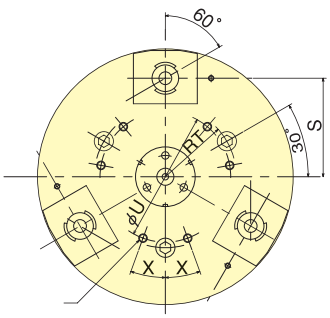

FGxx : 3-jaw

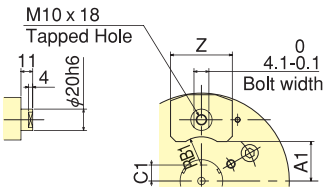

05", 06" jaw mounting part dimensions
(Jaw's shaft)

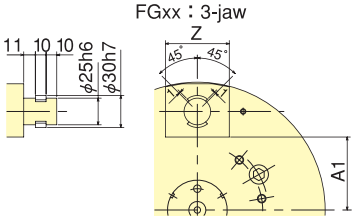

08", 10", 12" jaw mounting part dimensions
(Jaw's shaft)

■ Dimensions ※FGT : 2-jaw, FG : 3-jaw

Dimensions / Model	A	B	C	D	E	F	G	H	J	K	L	M	N	P	Q	R	S	T	U	V	W	X	Y	Z	A1	B1	C1
FGT05/FG05	135	110	14	9	37	50−70	110	36−56	8	12	15	30	5	14	M12	M10	42.5	41.3	50	30°	4−M6 screw depth 12	−	3−M6 screw depth 12	58	22	26.5	−
FGT06/FG06	165	140	16	12	40	50−70	110	36−56	8	12	15	30	5	14	M16	M10	57.5	52.4	64	30°	4−M8 screw depth 15	−	3−M8 screw depth 15	58	37	26.5	15
FGT08/FG08	210	170	25	16	56	50−70	120	71−91	8	12	15	30	5	18	M20	M12	77.5	66.7	104	50°	6−M8 screw depth 15	20°	6−M8 screw depth 15	60	53.5	−	−
FGT10/FG10	254	220	25	16	56	50−70	120	71−91	8	12	15	30	5	24	M20	M16	99.5	85.7	140	50°	6−M8 screw depth 15	20°	6−M8 screw depth 15	60	75.5	−	−
FGT12/FG12	304	220	25	16	56	50−70	120	71−91	8	12	15	30	5	24	M20	M16	124.5	85.7	190	50°	6−M8 screw depth 15	20°	6−M8 screw depth 15	60	100.5	−	−

■ Specifications ※FGT : 2-jaw, FG : 3-jaw ※1-Jaw length : 30mm ※2-Jaw length : 40mm

Specs / Model	Max. Draw Bar Pull Force kN(kgf)	Max. Speed min⁻¹	Net Weight kg	Moment of inertia kg・m²	Matching Cylinder	Clamping stroke mm	Gripping force / jaw kN(kgf)	Max. Gripping dia. mm	Limit height by optional jaw	Equalizing q'ty mm	Cylinder with seating
FGT05 / FG05	5.0 (510) / 7.5 (765)	4000	10.0／12.0	0.025／0.030	Y1020R	8	2.0(204)※1	52	41	1	Y1020RE09C
FGT06 / FG06	6.0 (612) / 9.0 (918)	4000	11.0／13.0	0.045／0.050	Y1020R	8	2.5(255)※1	78	41	1.5	Y1020RE09C
FGT08 / FG08	12.0(1224)／18.0(1835)	3500	22.0／24.0	0.130／0.140	Y1020R	8	5.5(561)※2	105	61	2	Y1020RE09C
FGT10 / FG10	12.0(1224)／18.0(1835)	3500	34.0／36.0	0.290／0.310	Y1020R	8	5.5(561)※2	150	61	2	Y1020RE09C
FGT12 / FG12	12.0(1224)／18.0(1835)	3000	46.0／48.0	0.570／0.590	Y1020R	8	5.5(561)※2	200	61	2.5	Y1020RE09C

■ Dimentional Drawings for Blank Jaws (Option)

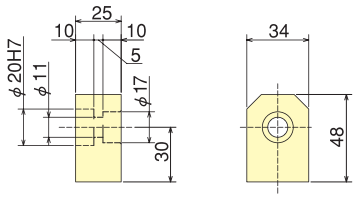

for 05", 06"

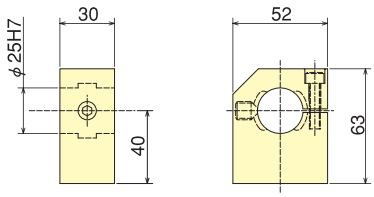

for 08", 10", 12"

Gripping Examples

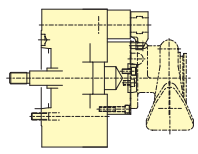

Turbine housing