THE INFORMATION CONTAINED IN THIS DRAWING IS THE SOLE PROPERTY OF ABBOTT WORKHOLDING PRODUCTS. ANY REPRODUCTION IN PART OR WHOLE WITHOUT THE WRITTEN PERMISSION OF ABBOTT WORKHOLDING PRODUCTS IS PROHIBITED.

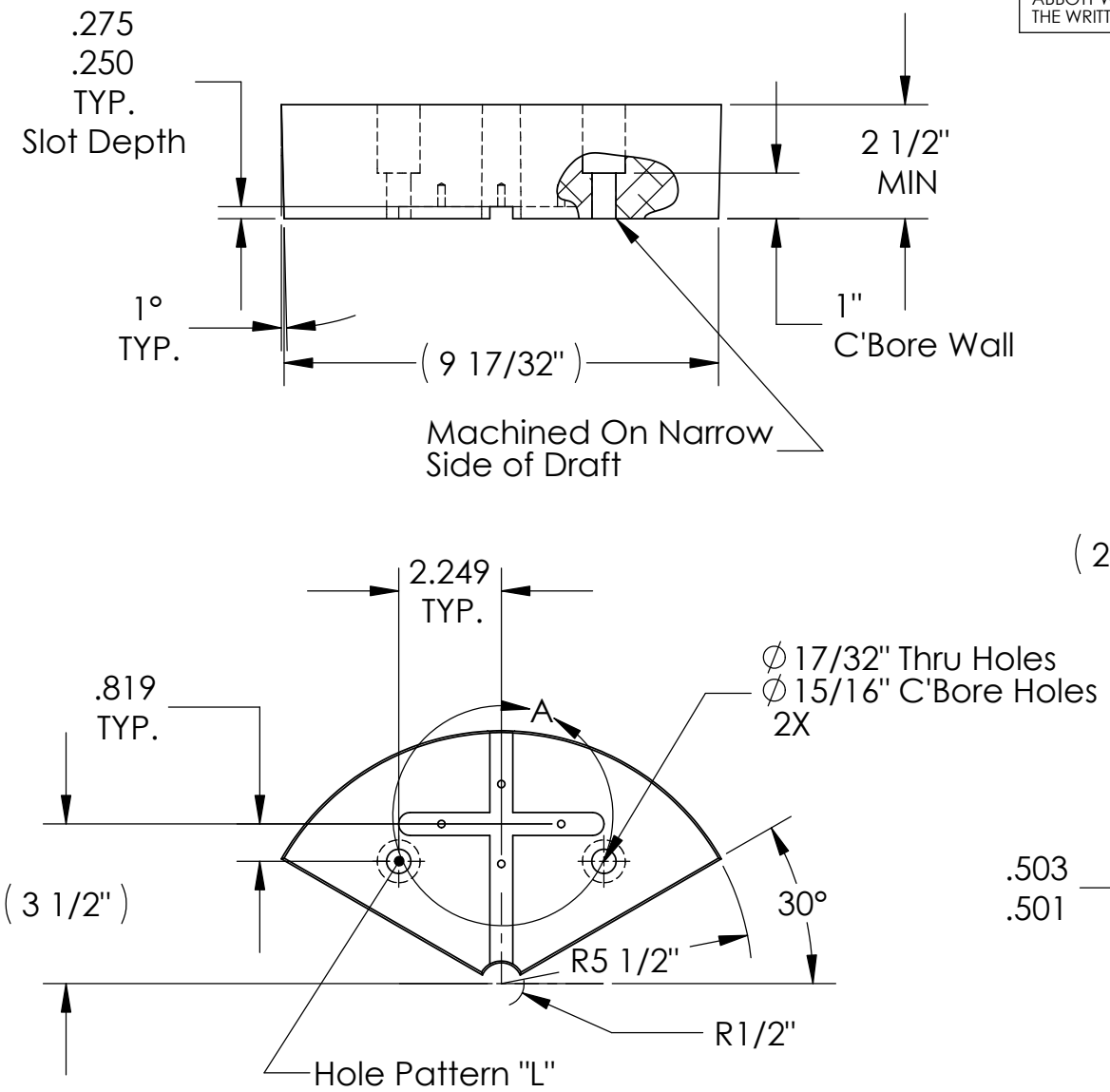

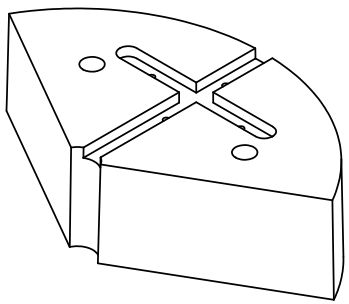

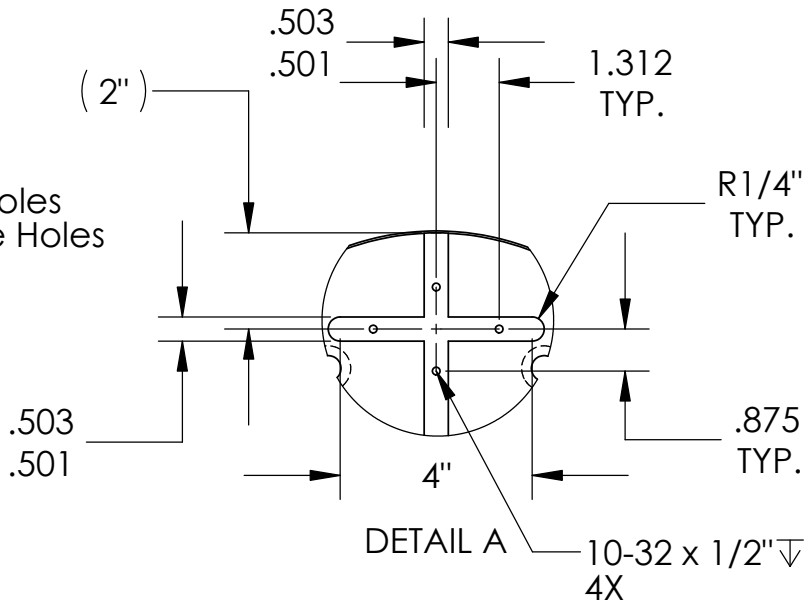

UNLESS OTHERWISE SPECIFIED
DIMENSIONS ARE IN INCHES
TOLERANCES ARE:

FRACTIONS	DECIMALS	ANGLES
±1/32	.XX± .015	± 5°
	.XXX ±.005	
	.XXXX ±.0005	

DRAWN: Ahh	DATE: 1/10/06
MATERIAL: A319	WEIGHT(POUNDS): 7.7
STYLE: O	DISPOSITION: Released

Abbott Workholding Products
430 McCall Road
Manhattan, KS 66502
785-776-8555
785-587-0004 Fax
800-528-6459
www.abbottworkholding.com
engineering@abbottworkholding.com

CUSTOMER:	SIZE	Part Name	REV.
Stock	A	111SP2.5	--